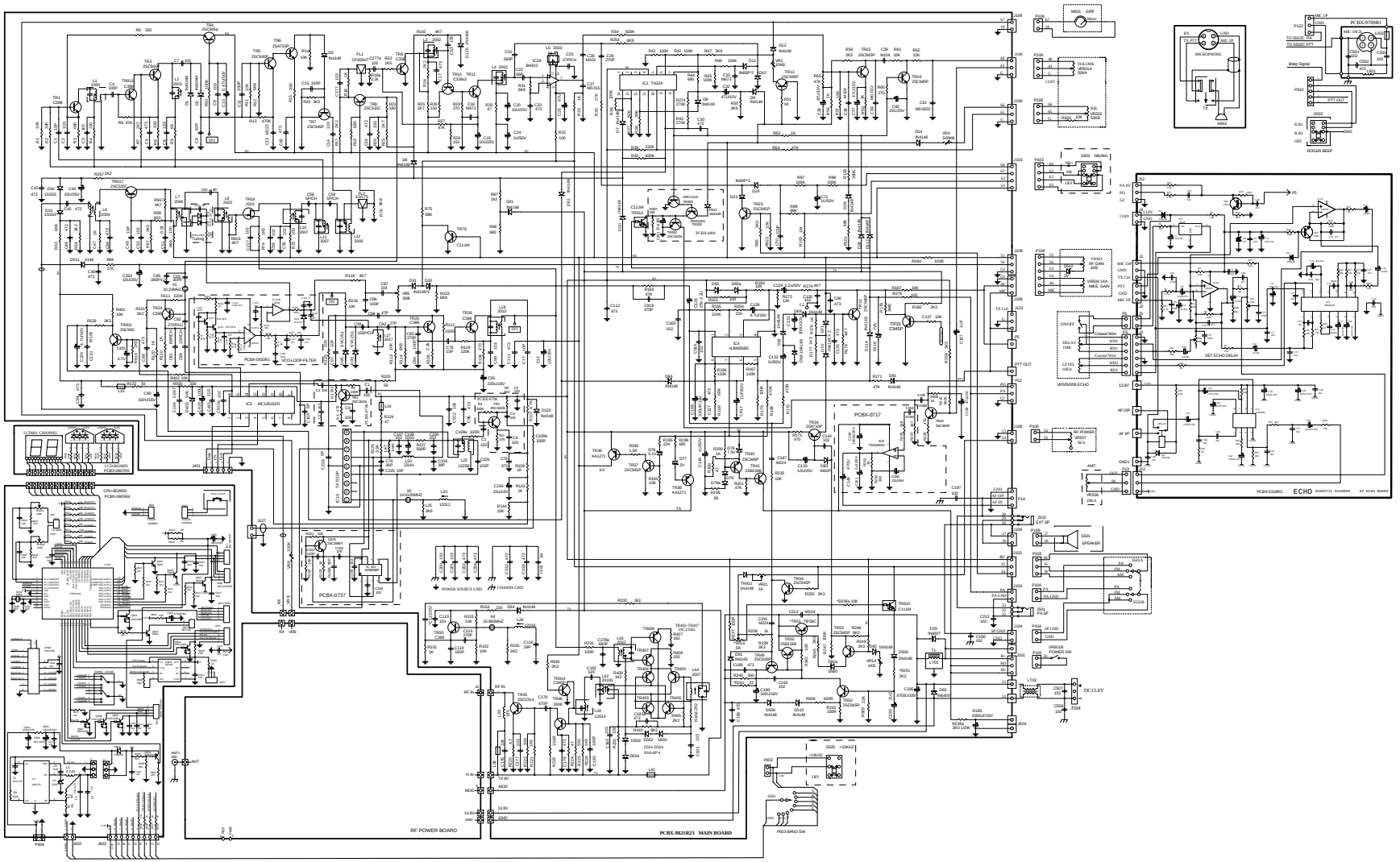

PCBX-0717
PCBX-0737
PCBX-0805R1
VCO/LOOP-FILTER
IC1 TA324
IC4 NJM4558D
IC5 MC14516CD
LCD081 CHANNEL
LCD-0810AR0
PCBX-0807DS
CPU-BOARD
PCBX-0805R4
POWER SOURCE GND
CHASSIS GND
RF POWER BOARD
PCBX-9821R23 MAIN BOARD
PCBX-0310R5
ECHO SCHMATIC DIAGRAM OF ECHO BOARD
SET ECHO DELAY
VR5055506 ECHO
MICROPHONE
MIKE
ROGER BEEP
PCBX-0709R1
SPEAKER
POWER SW
DC13.8V
PA SP
SP GND
PA GND
PA.SP
PTT OUT
Beep Signal
TO S602C PTT
TO S602C PTT