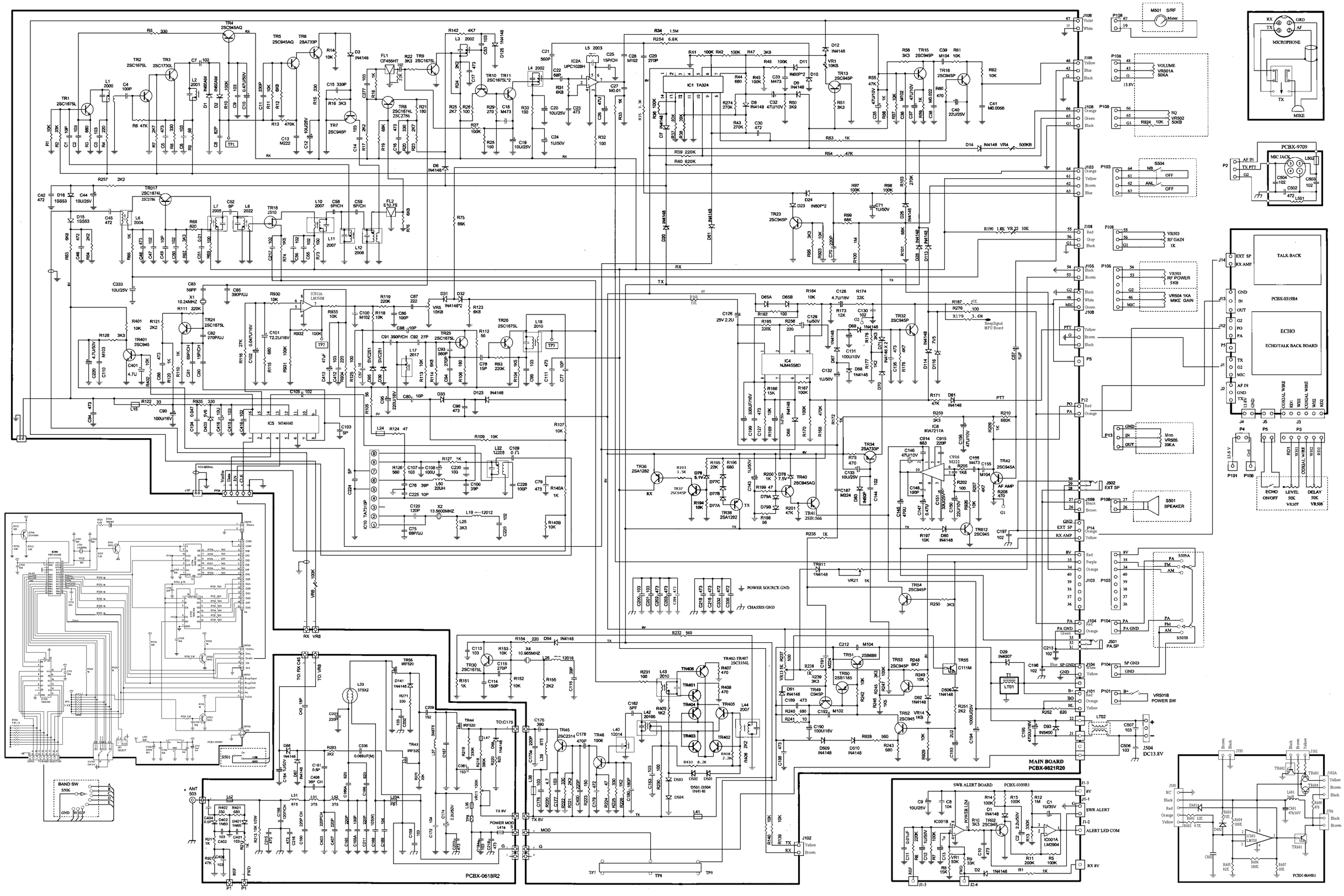
MAIN BOARD
PCBX-9821R20
PCBX-0618R2
PCBX-0309R1
PCBX-9709
PCBX-0319R4
PCBX-8646R1
TALK BACK
ECHO
ECHO/TALK BACK BOARD
MICROPHONE
MIC JACK
VOLUME
VR501A
50KA
SQ
VR502
50KB
SS04
NB
ANL
OFF
VR503
RF GAIN
1K
VR504 1KA
MIC GAIN
VR503
RF POWER
5KB
M501 S/RF
Meter
Mem
VR505
20KA
S501
SPEAKER
VR501B
POWER SW
DC13.8V
BAND SW
S506
ANT
503
POWER SOURCE GND
CHASSIS GND
SWR ALERT BOARD
SWR ALERT
ALERT LED COM
AF AMP
EXT SP
RX AMP
TX
RX
PTT
MOD
POWER MOD
ECHO
ON/OFF
LEVEL
50K
VR507
DELAY
50K
VR508
COAXIAL WIRE
BEEP SIGNAL
MPU BOARD