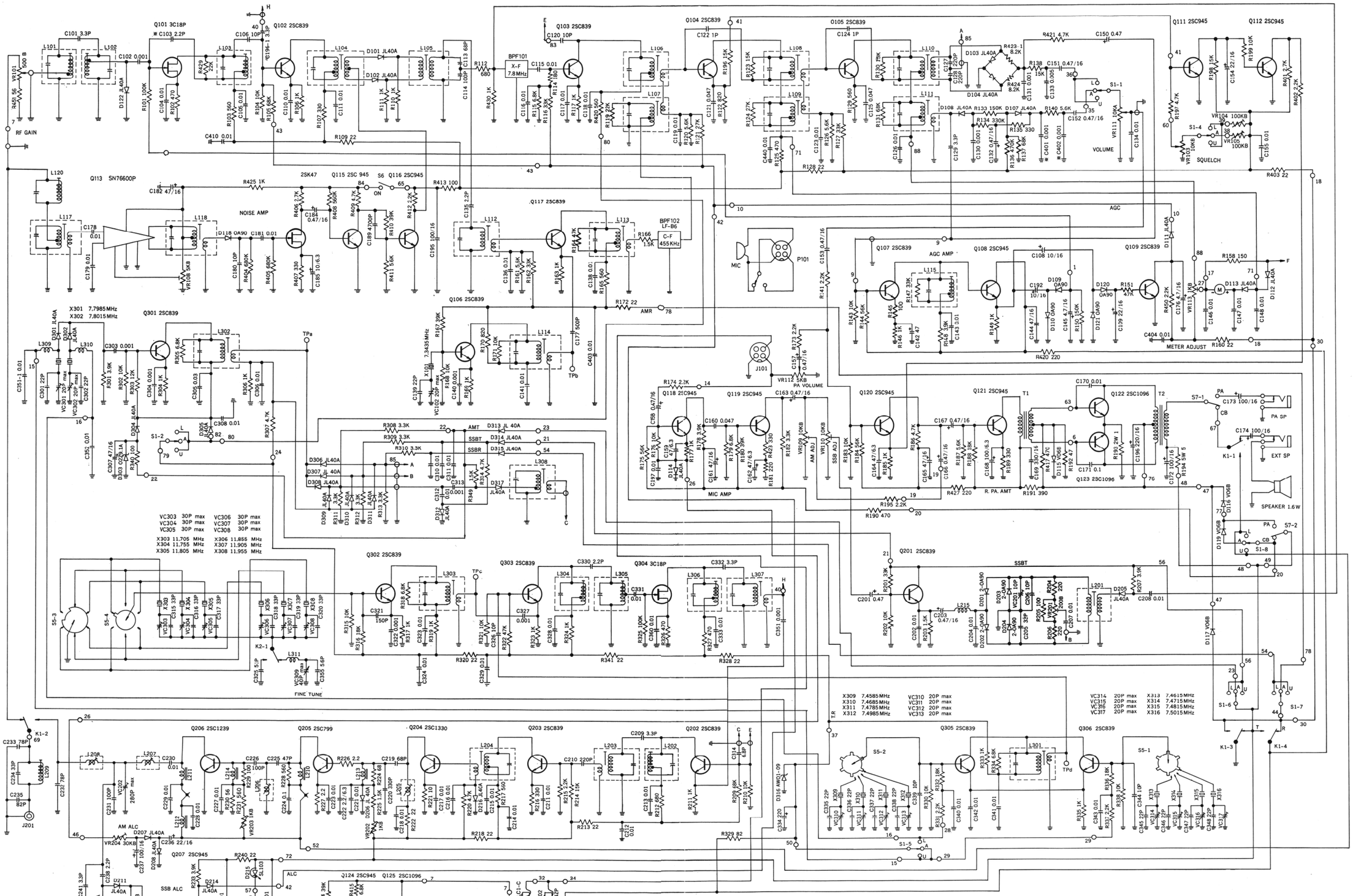

MODEL SILTRONIX SSB-23

SSB/AM CB TRANSCEIVER

NOTES:
1) ALL RESISTANCE ARE IN OHMS AND WATTAGES OF RESISTOR ARE ¼ WATT UNLESS OTHERWISE SPECIFIED.
2) CAPACITANCES FOLLOWED BY P ARE IN MICRO-MICRO FARADS OR PICO FARADS OTHERS ARE IN MICRO FARADS AND RATED VOLTAGES OF CAPACITOR ARE 50WV UNLESS OTHERWISE SPECIFIED.
3) * SUBJECT TO CHANGE IN INDIVIDUAL UNIT.