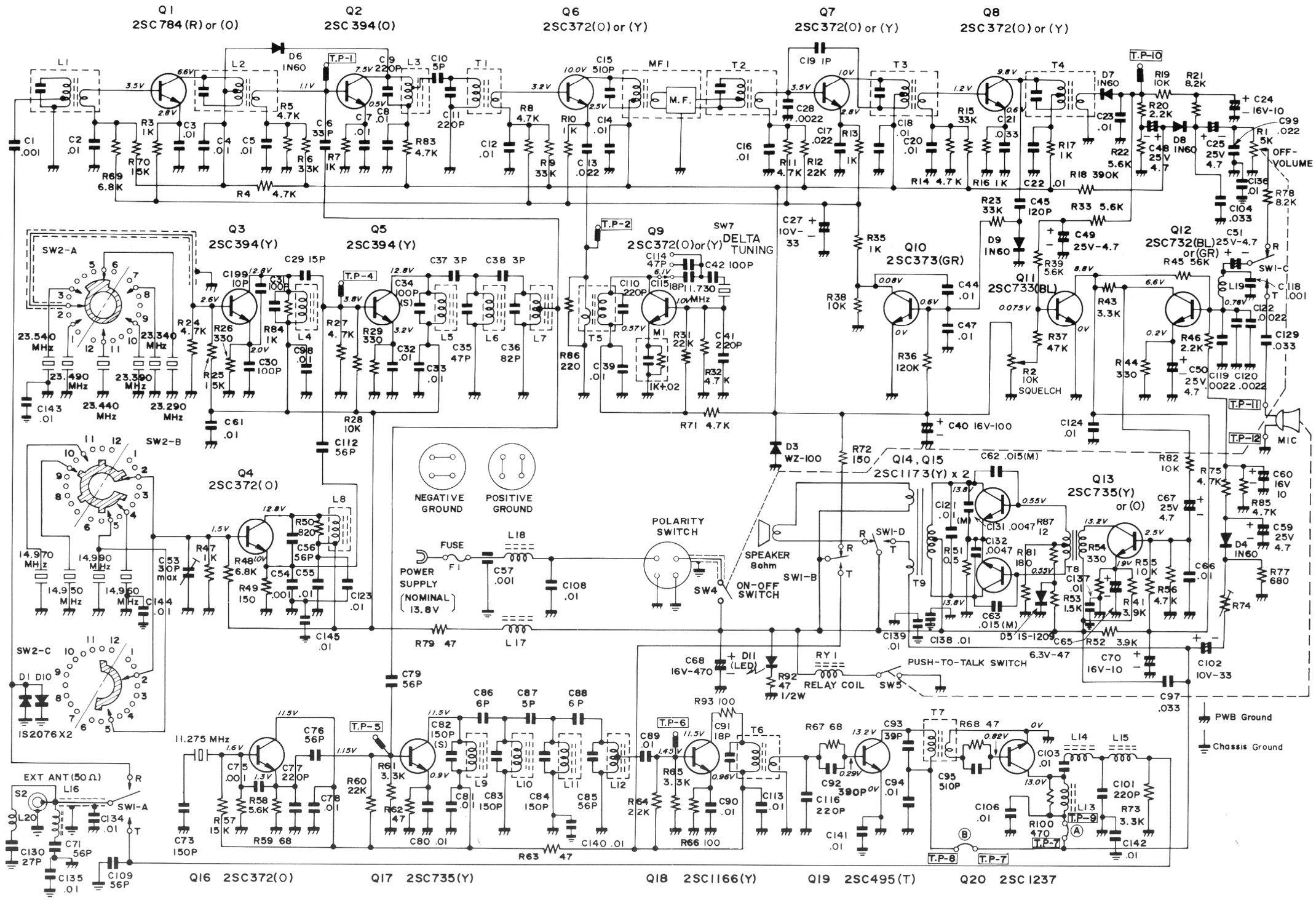

Specifications or wiring diagrams of this model are subject to change for the improvement without prior notice.

Figure 5 SCHEMATIC DIAGRAM