SCHEMATIC DIAGRAM

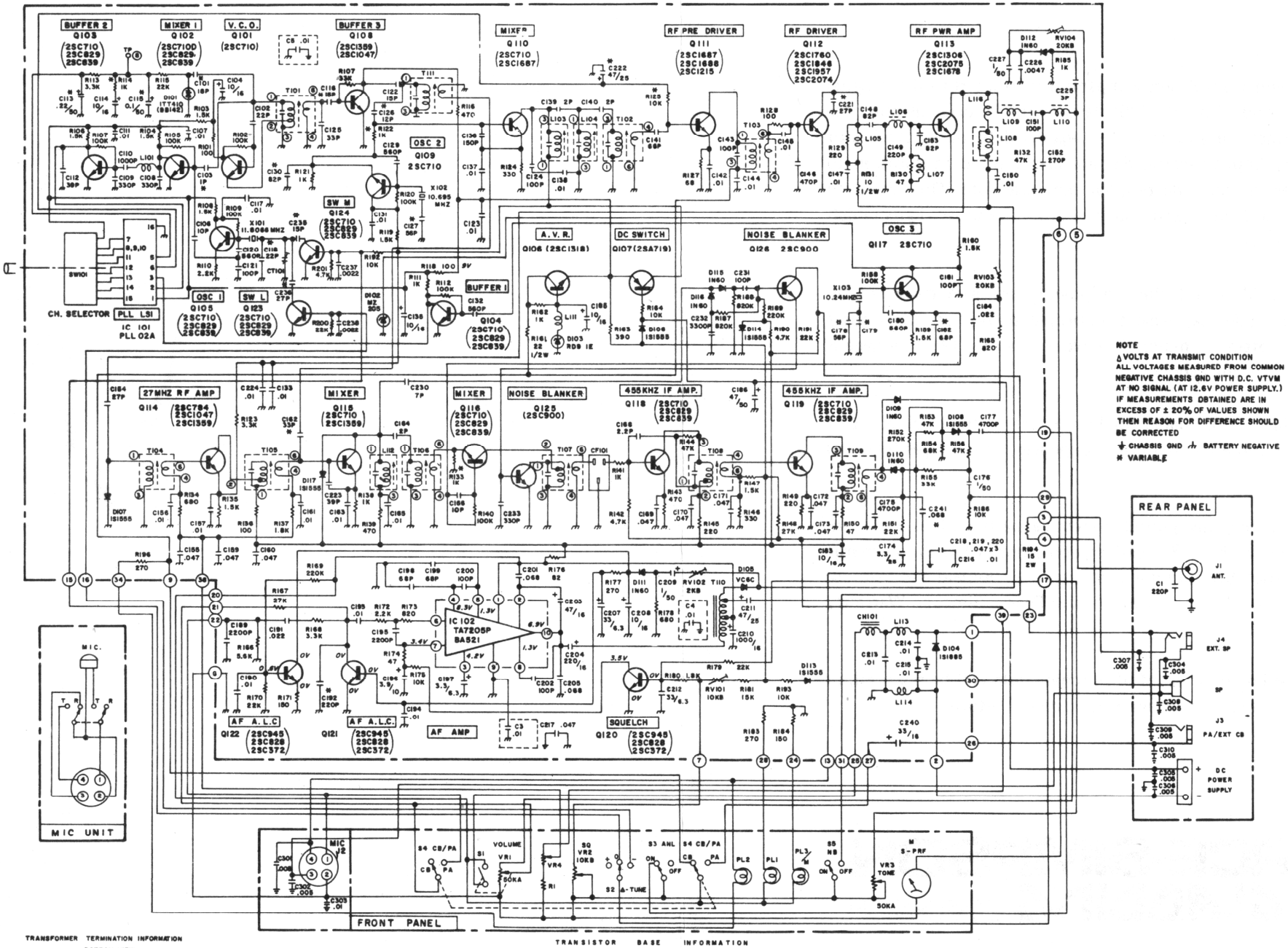

NOTE

Δ VOLTS AT TRANSMIT CONDITION
ALL VOLTAGES MEASURED FROM COMMON NEGATIVE CHASSIS GND WITH D.C. VTVM AT NO SIGNAL (AT 12.6V POWER SUPPLY.)
IF MEASUREMENTS OBTAINED ARE IN EXCESS OF ± 20% OF VALUES SHOWN THEN REASON FOR DIFFERENCE SHOULD BE CORRECTED
⏚ CHASSIS GND ⏚ BATTERY NEGATIVE
* VARIABLE

TRANSFORMER TERMINATION INFORMATION

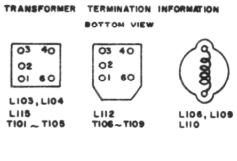

TRANSISTOR BASE INFORMATION

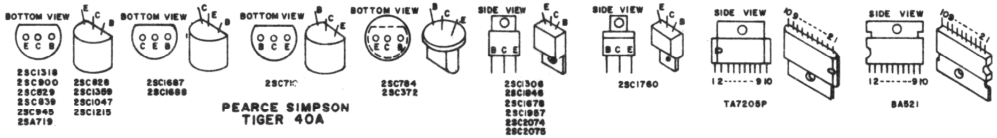

PEARCE SIMPSON
TIGER 40A