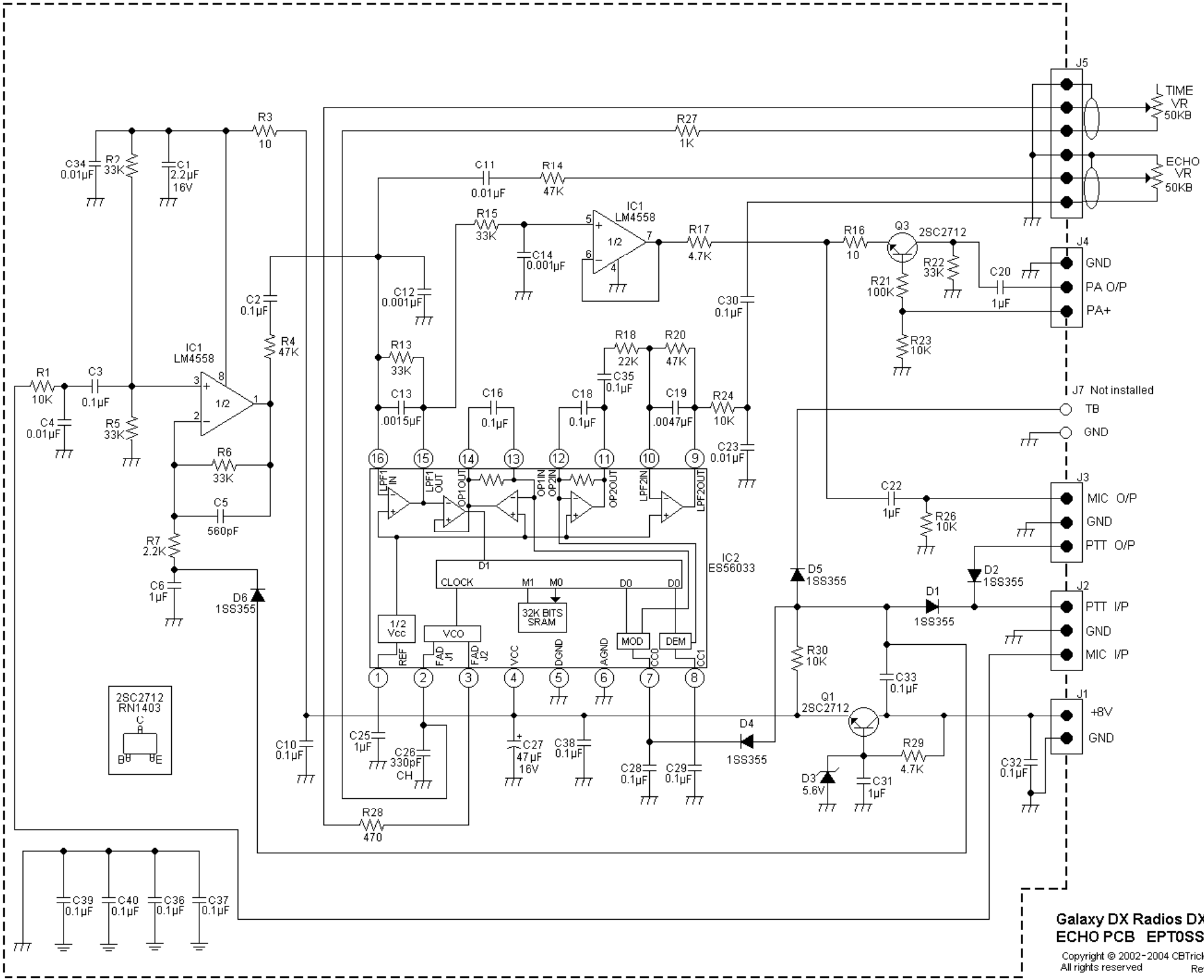

Galaxy DX Radios DX77HML
ECHO PCB EPT0SSB50F

Copyright © 2002-2004 CBTricks.com
All rights reserved

Rev. 1.2