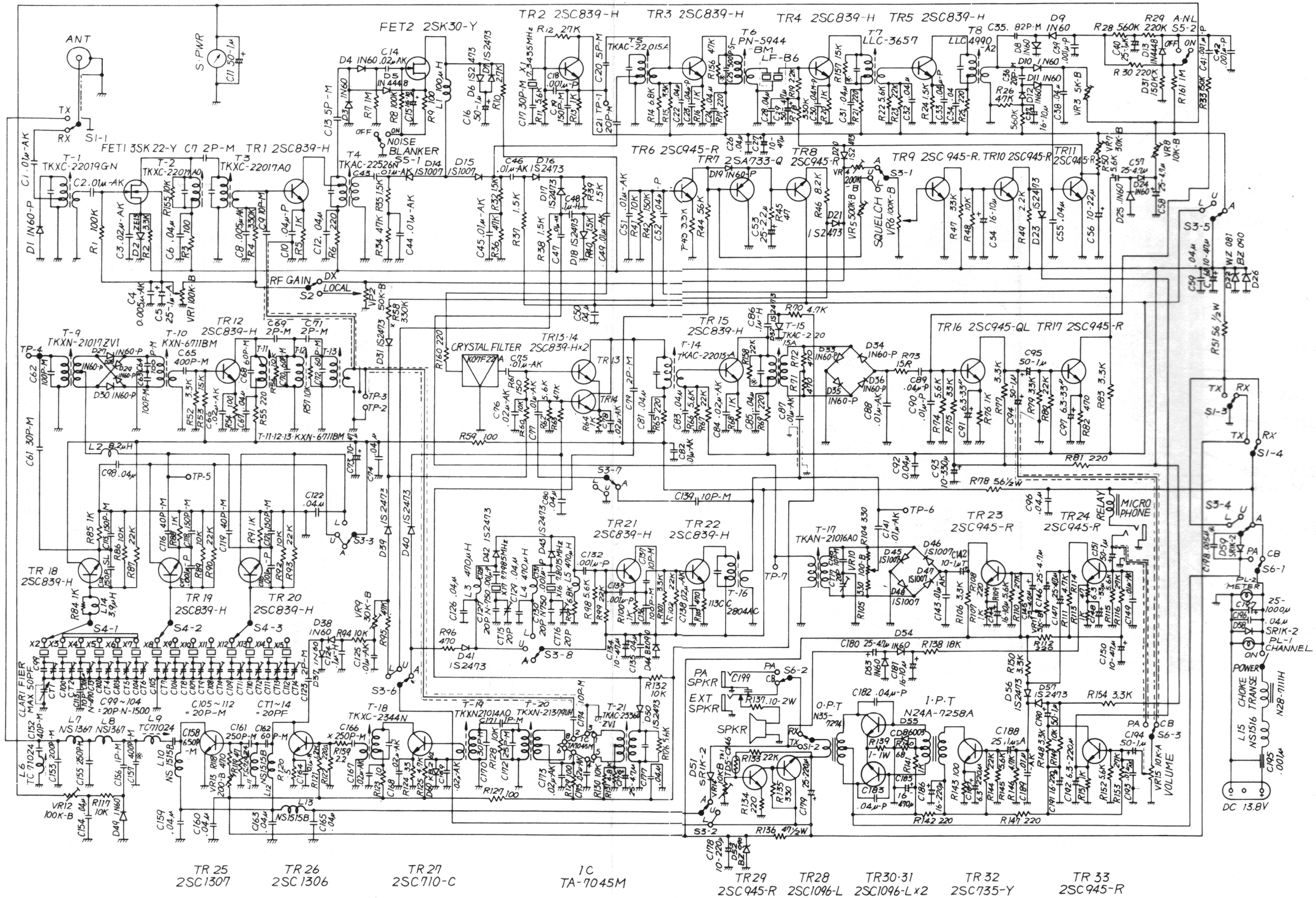

FIGURE 8, SCHEMATIC DIAGRAM