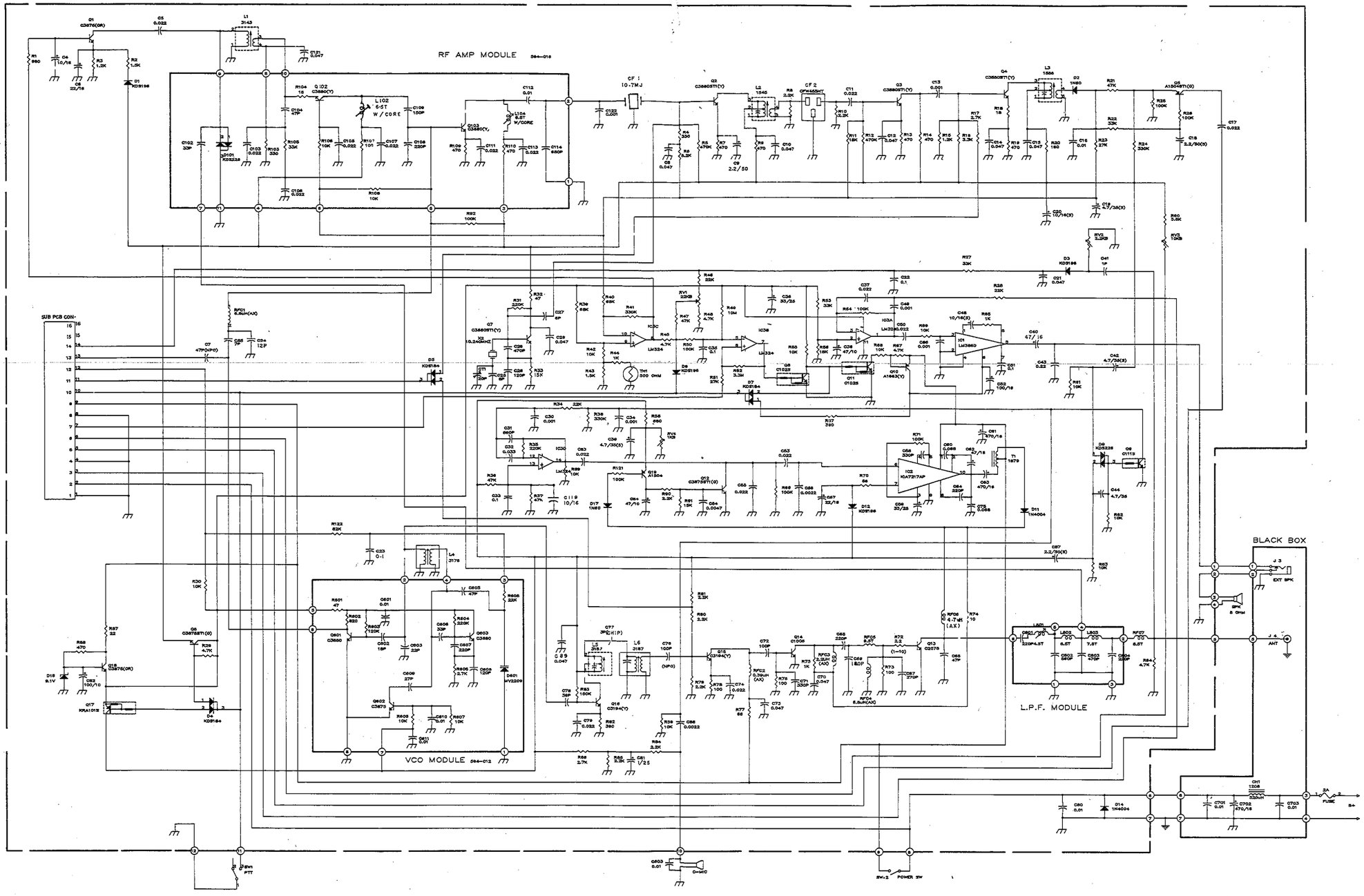

Printed in Thailand
943438A

HH-70 SCHEMATIC DIAGRAM

BILL OF MATERIAL FOR HH-70

REFERENCE	PART NAME DESCRIPTION
R18	Resistor Chip 18:MCR10EZH180J
R20	Resistor Chip 180:MCR10EZH181J
R56	Resistor Chip 18K:MCR10EZH183J
R87	Resistor Chip 22:MCR10EZH220J
R8, 10, 79, 80, 81, 84, 85, 90	Resistor Chip 2.2K:MCR10EZH222J
R28, 34, 46	Resistor Chip 22K:MCR10EZH223J
R31, 35	Resistor Chip 220K:MCR10EZH224J
R72	Resistor Chip 2.2:MCR10EZH2R2J
R17, 86	Resistor Chip 2.7K:MCR10EZH272J
R23, 51	Resistor Chip 27:MCR10EZH273J
R4	Resistor Chip 330:MCR10EZH331J
R16	Resistor Chip 3.3K:MCR10EZH332J
R22, 27, 53	Resistor Chip 33K:MCR10EZH333J
R24, 38, 41	Resistor Chip 330K:MCR10EZH334J
R52	Resistor Chip 3.3M:MCR10EZH335J
R57, 82	Resistor hip 390:MCR10EZH391J
R32	Resistor Chip 47:MCR10EZH470J
R7, 9, 13, 14, 19, 88	Resistor Chip 470:MCR10EZH471J
R29, 45, 48, 64, 67	Resistor Chip 4.7K:MCR10EZH472J
R21, 36, 37, 47	Resistor Chip 47K:MCR10EZH473J
R5, 12	Resistor Chip 470K:MCR10EZH474J
R70	Resistor Chip 56:MCR10EZH560J
R60	Resistor Chip 5.6K:MCR10EZH562J
R77	Resistor Chip 68:MCR10EZH680J
R1, 58	Resistor Chip 680:MCR10EZH681J
R39, 40	Resistor Chip 68K:MCR10EZH683J
R6	Resistor Chip 8.2K:MCR10EZH822J
R122	Resistor Chip 82K:MCR10EZH823J
C13, 30, 34, 49, 86 88, 122	Ceramic Chip 0.001μF:CM21CG102K50AT
C22, 33, 35, 51	Ceramic Chip 0.1μF:CM21Y5V104Z25AT
C16, 80	Ceramic Chip 0.01μF:CM21×7R103K50AT
C56, 88	Ceramic Chip 0.0022φF:CM21×7R222K50AT
C5, 11, 17, 37, 50, 53 55, 74, 79, 83	Ceramic Chip 0.022μF:CM21×7R223K50AT
C43	Ceramic Chip 0.22μF:CM21Y5V224Z25AT
C32	Ceramic Chip 0.033μF:CM21×7R333K50AT
C8, 10, 12, 14, 15, 21 23, 29, 70, 73, 121	Ceramic Chip 0.047μF:CM21×7R473K50AT
C60, 75	Ceramic Chip 0.068φF:CM21×7R683K50AT
C72, 76	Ceramic Chip 100PF:CM21CG101J50AT
C41	Ceramic Chip 1PF:CM21CG010C50AT
C28	Ceramic Chip 120PF:CM21CG121J50AT
C64, 68, 69	Ceramic Chip 220PF:CM21CG221J50AT
C67	Ceramic Chip 270PF:CM21CG271J50AT
C58, 71	Ceramic Chip 330PF:CM21CG331J50AT
C78	Ceramic Chip 39PF:CM21CG390J50AT
C54	Ceramic Chip 0.0047μF:CM21×7R472K50AT
C7, 66	Ceramic Chip 47PF:CM21CG470J50AT
C26	Ceramic Chip 470PF:CM21CG471J50AT
C31	Ceramic Chip 560PF:CM21CG561J50AT
C27	Ceramic Chip 6PF:CM21CG60D50AT
C24, 85	Ceramic Chip 7PF:CM21CG070D50AT
C25	Ceramic Chip 8PF:CM21CG080D50AT
Q5, 9	Transistor KTA1504ST1(G)
Q1, 6, 12, 18	Transistor KTC3875ST1(G)
Q8, 11	BRT KRC102S
Q9	BRT KRC111S
Q2, 3, 4, 7	Transistor KTC3880ST1(Y)
Q10	Transistor KTA1663
Q17	Transistor KRA101S
IC2	I.C KIA324F
IC1	I.C LM386D
D9	Diode Si KDS226
D4, 5, 7	Diode Si KDS184S
D1, 3, 6, 12	Diode KDS196S
	P.C.B Main
	Packing Ass'y
Mic Bracket MTG	(+) Tapping Screw(BH) 3×10-2S Ni-Plat
Black Box MTG	(+) Tapping Screw(TH) 4×12-1S Ni-Plat
MIC Bracket MTG	Washer (Sprping) M3 Ni-Plat
Black Box MTG	Washer (Spring) M4 Ni-Plat
	Bracket SUS 0.8t
Set. Black Box	Wire Clamp (Cord) Nylon
	Box Tray SW1S 215(W)×193(D)×60(H)
	Box Inner Manila 215.0(W)×194.0(D)×60(H)
	Box Out DW1 395(W)×310(D)×220(H)
Screw/Washer/Bracket/ Packing	Polybag P.P 100×100×0.05t
Set. Black Box	Polybag P.P 150×300×0.05t
	Manual Instruction
	Card Registration
	CB Rule
	Schematic Diagram
	Upper Cover Ass'y
C603	Ceramic Chip 0.01μF:CM21X7R103K50AT
SP1	Speaker 44-8B-06 8Ohm 0.5W
C-MIC	MIC Condenser WM034CY
J1.5	Connector Waffer 8283-0212-00-000:2PIN
Bushing	Busing (FOR T.R 2SC2078)
J2.6	2P Housing Ass'y 2P 100MM
	Wire Cover Ass'y
	Wire 1007 AWG 24 (1/0.51) BLK
	Wire 1007 AWG 24 (1/0.51) RED
Main MIC(+)—MIC(+) 0.5:0.5	Wire Vinyl 080D (7/0.12) ORG
Main SP(+)—SP(+) 0.5:0.5	Wire Vinyl 080D (7/0.12) YEL

REFERENCE	PART NAME DESCRIPTION
	Black Box Ass'y
C702	Capacitor Elect 470μF 16V SMS:(M) 10×12.5
C701, 703	Ceramic 0.01μF 50WV:Z "F"
CH1	Transformer Choke El-14
	P.C.B SUB 66.5×27.5×1.6T
Curl Cord	Cord Curl KSK-23075 4CO 1SH Put BLK
J3	Jack Earphone DHJ-3T
Ant	Connector CH-239(A) SW-1229
	Power Cord Ass'y
	Fuse 250V 2A
	Wire 1015 AWG 20(10/0.26) RED
	Wire 1015 AWG 20(10/0.26) BLK
	Fuse Holder
Black Box PCB MTG	(+) Tap Tite Screw BH3×6 Zn-Plat
	Cover Up (Black Box) E.G.I T1 Us Coating
	Cover Bo (Black Box) E.G.I T1 Us Coating
	Holder (ANT MTG) Spte 0.25t
	Holder (MIC MTG)
	Cord Stopper P.P BLK
	Bushing Rubber BLK
For Use Holder	Label Caution 2A 40×28×0.02t
	Cover Ass'y
Holder MTG	(+) Tapping Screw(FH) 2.6×12-2S BLK
Upper & Bottom MTG	(+) Tapping Screw(BH) 3×10-2S BLK
	Frame ABS 94HB A215M
	Cover Upper ABS 94HB A215M
	Cover Bottom ABS 94HB A215M
	Holder PC Dark Gray
	Lens-Acryl Clear
	Knob VOL. SQ ABS 94HB A215M
	Holder(MIC) 69.8×φ11.4×7t Rubb. BLK
	Cushion φ11×8t Sponge
	PTT Button Silicone Rubber HS55'
	Key Pad Silicone Rubber HS60'
Upper SPK MTG	Felt φ37×0.3t Felt BLK
	Felt 8×45×0.5t Felt Stick
	Esd Protector Cup 0.05t Sticker
Bottom Air MTG	Felt Felt 55×35×0.3t
	Label Name Polyester 49.5×14.5
	LCD PCB A'ssy
R550	Resistor Chip 1K:MCR10EZH102J
R514, 515, 516, 517 520, 521	Resistor Chip 10K:MCR10ZH103J
R501-R513	Resistor Chip 1M:MCR10EZH105J
R525	Resistor Chip 2.2K:MCR10EZH222J
R519	Resistor Chip 220K:MCR10EZH224J
R522, 523	Resistor Chip 330:MCR10EZH331J
R526	Resistor Chip 47K:MCR10EZH473J
R518	Resistor Chip 470K:MCR10EZH474J
R524	Resistor Chip 5.1K:MCR10EZH512J
C505	Capacitor Elect 47μF 10V SM:(M) 5×11
C507	Ceramic Chip 0.001μF:CM21CG102K50AT
C503	Ceramic Chip 0.01μF:CM21×7R103K50AT
C502	Ceramic Chip 15PF:CM21CG150J50AT
C501	Ceramic Chip 22PF:CM21CG220J50AT
C506	Tantalum Dip 0.47μF 35V:489D474×0035A1
C504	Tantalum Dip 10μF 16V:489D106×0016C1
CT1	Capacitor Trimmer 20PF:ECR-LA020A12
Q501	Transistor KTA1504ST1(G)
Q502	Transistor KTC3875ST1(G)
IC501	I.C LC7234-8496
D503	Diode Zener UZ-5.6BM:5.6V 0.5W
D504	Diode Zener 1N5234B
D501, 502	Diode KDS196S
LED501, 502	LED Back Light KLS-002MS
LED Display	LCD LE-0202AP
X501	Crystal HC-49/U 4.5MHz 30PPM 16PF
	P.C.B A'ssy 58.2×115×1.2t FR4 1/1
	P.C.B Main(Top) 99×58.2×1.2t FR4
	P.C.B Sub 21.5×13.5×1.2t FR4 1/1
VR501	VR 10KA:121PS2-1
VR502	VR 10KB:121PN-01
VOL, SQ MTG	(+) Machine Screw(RH) 1.7×6 Zn-Plat
	Shield Plate SPTE 0.3t
VOL, SQ MTG	Shaft (VOL.SQ) BSBM & 66.0
	Main Body Ass'y
Q13	Transistor KTC2075
IC2	I.C KIA7217AP
T1	Transformer EI-19 CHOKE
	Header Pin Connector GDH2-16DBC (1.2)
	Connector TDH2-16SG
MICA	MICA (For T.R 2SC2078)
LCD PCB MTG	(+) Machine Screw (PH) 2.6×4 Zn-Plat
Audio:2 TR:1	(+) Machine Screw(FH) 2.6×8 Zn-Plat
Audio:2 TR1	Nut SS41 M2.6-1S Zn-Plat
Audio:2 TR1	Washer Spring φ2.6 Zn-Plat
	Body Main EGI 0.8t Us Coating
	Heat Sink (Audio) ALP3 2t
	Heat Sink Cup 0.3t
	Main PCB Manual Assy
RV4	Resistor Semifixed 1KB:RH0651C100102
RV3	Resistor Semifixed 10KB:RH0651C100103
RV2	Resistor Semifixed 2.2KB:RH0651C100222
RV1	Resistor Semifixed 22KB:RH0651C100223
TH1	Thermistor 500 Ohm±15%:KC5C150L
C82	Capacitor Elect 100μF 10V SM(M):6.3×11
C52	Capacitor Elect 100μF 16V SM(M):8×11.5
C4, 20, 48	Capacitor Elect 10μF 16V SRA(M):4×7
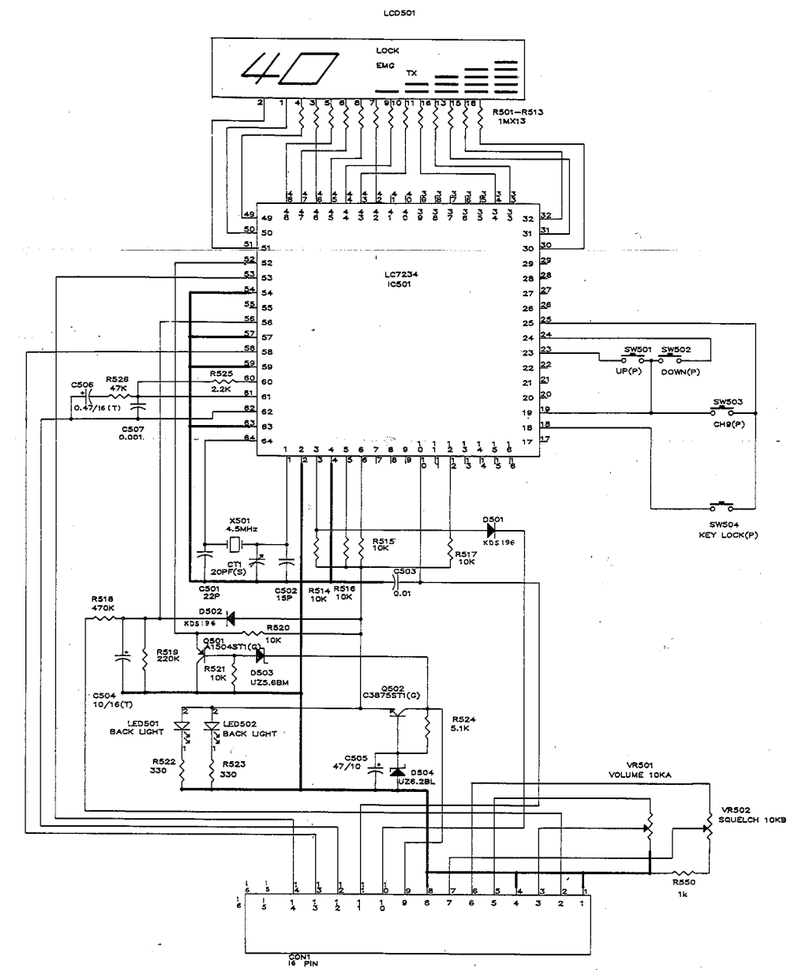
REFERENCE	Part Name & DESCRIPTION
C9, 18, 87	Capacitor Elect 2.2μF 50V SRA:(M) 4×7
C6, 57	Capacitor Elect 22μF 16V SRA:(M) 5×7
C36, 59	Capacitor Elect 33μF 25V SMS:(M) 5×11
C38,84	Capacitor Elect 47μF 10V SM:(M) 5×11
C40, 62	Capacitor Elect 47μF 16V SM:(M) 6.3×11
C61, 63	Capacitor Elect 470μF 16V SMS:(M) 10×12.5
C19, 39, 42, 44	Capacitor Elect 4.7μF 35V SRA:(M) 4×7
C77	Ceramic Disk 3PF 50V:DD330CJ030C50V
C81	Tantalum Dip 1μF 25V 1489D105×0025A1
CT1	Capacitor Trimmer 20PF 6DIA:CVN
Q15, 16	Transistor KTC3194(Y)
Q14	Transistor KTC1006
D16	Diode Zener 1N5239B
D2, 17	Diode Ge 1N60
D11, 14	Diode 1N4004 (1A 400V)
X2	Crystal HC-49/U 10.240MHz 32PF:30PPM
CF2	fileter Ceramic KBF-455R-6As
CF1	Ceramic Filter SK107M4-AC-20
RFC3	Coil Axial 2.2μH:LAL03TB2R2M
RFC1, 4	Coil Axial 6.8μH:LAL03TB6R8K
RFC2	Coial Axial 0.39μH:LAL02TBR39K
RFC7	Coil Spring 3.4DIAX0.55DIAX8.5t:R
RFC5	Coil Spring 3.4×0.55×9.5t:R
L2	Coil IFT 455KHz-A
L3	Coil IFT 455KHz-B
L1	Coil 27MHz RX ANT
L4	Coil Vco
L5, l6	Coil RF Pre Amp A TX27MHz
SW1	SW Tact SAT1104-2
RFC6	9.5T Sprin.Coil Assy
	Coil Spring 3.4×0.55×9.5tR
	Core 1108-KA-015 M9DTH3.7×8
M3	VCO Module Ass'y
R600, 609	Resistor Chip 0:MCR10EZH0R0J
R606, 607	Resistor Chip 10K:MCR10EZH103J
R603	Resistor Chip 120K:MCR10EZH124J
R608	Resistor Chip 22K:MCR10EZH223J
R604	Resistor Chip 220K:MCR10EZH224J
R605	Resistor Chip 2.7K:MCR10EZH272J
R601	Resistor Chip 47:MCR10EZH470J
R602	Resistor Chip 820:MCR10EZH821J
C601, 610, 611	Ceramic Chip 0.01μF:CM21×7R103K50AT
C608	Ceramic Chip 120PF:CM21CG121J50AT
C602	Ceramic Chip 18PF:CM21CG180J50AT
C603	Ceramic Chip 22PF:CM21CG220J50AT
C607	Ceramic Chip 220PF:CM21CG221J50AT
C609	Ceramic Chip 27PF:CM21CG270J50AT
C606	Ceramic Chip 33PF:CM21CG330J50AT
C605	Ceramic Chip 47PF:CM21CG470J50AT
Q602	Transistor KTC3875SY
Q601, 603	Transistor KTC3880ST1(Y)
D601	Diode Varicap LV2209
	P.C.B VCO MODULE 30.7×1.6T XPC 94HB 1/1
M1	RF AMP H/H Module
R100, 102, 102	Resistor Chip 0:MCR10EZHOR0J
R107	Resistor Chip 100:MCR10EZH101J
R106, 108	Resistor Chip 10K:MCR10EZH103J
R104	Resistor Chip 18:MCR10EZH180J
R103	Resistor Chip 330:MCR10EZH331J
R105	Resistor Chip 33K:MCR10EZH333J
R109, 110	Resistor Chip 470:MCR10EZH471J
C112	Ceramic Chip 0.01μF:CM21×7R103K50AT
C103, 105, 106, 107 111, 113	Ceramic Chip 0.022μF:CM21×7R223K50AT
C109	Ceramic Chip 150PF:CM21CG151J50AT
C108	Ceramic Chip 220PF:CM21CG221J50AT
C102	Ceramic Chip 33PF:CM21CG330J50AT
C104	Ceramic Chip 47PF:CM21CG470J50AT
C114	Ceramic Chip 680PF:CM21CG681K50AT
Q102, 103	Transistor KTC3880ST1(Y)
D101	Diode Si KDS226
	P.C.B Module 39.25×16.88×1.6t XPC 94HB 1/1
L102, 104	6.5T Sprin. Coil Ass'y
	Coil Spring 3.4DIA×0.55DIA×6.5t:R
	Core 1108-KA-058 M9DTH3.7×6
	L.P.F Module MIC ASY
C801, 804	Ceramic Chip 220PF:CM21CG221J50AT
C803	Ceramic Chip 470PF:CM21CG471J50AT
C802	Ceramic Chip 560PF:CM21CG561J50AT
L802	Coil Spring 3.4DIA×0.55DIA×6.5t:R
L803	Coil Spring 3.4DIA×0.55DIA×7.5t:R
	P.C.B SUB 21.5×13.5×1.2t FR4 1/1
L801	4.5t Sprin. Coil Ass'y
	Coil Spring 3.4×0.55×4.5t:R
	Core 1108-KA-058 M9DTH3.7×6
	Main PCB SMD Ass'y
R74	Resistor Chip 10:MCR10EZH110J
R73, 76, 78	Resistor Chip 100:MCR10EZH101J
R44, 65, 75	Resistor Chip 1K:MCR10EZH102J
R30, 42, 55, 59, 61 62, 63, 66, 68, 89	Resistor Chip 10K:MCR10EZH103J
R25, 26, 50, 54, 69, 71 92, 121	Resistor Chip 100K:MCR10EZH104J
R49	Resistor Chip 10M:MCR10EZH106J
R3, 15	Resistor Chip 1.2K:MCR10EZH122J
R2, 43	Resistor Chip 1.5K:MCR10EZH152J
R11, 33, 91	Resistor Chip 15K:MCR10EZH153J
R83	Resistor Chip 150K:MCR10EZH154J