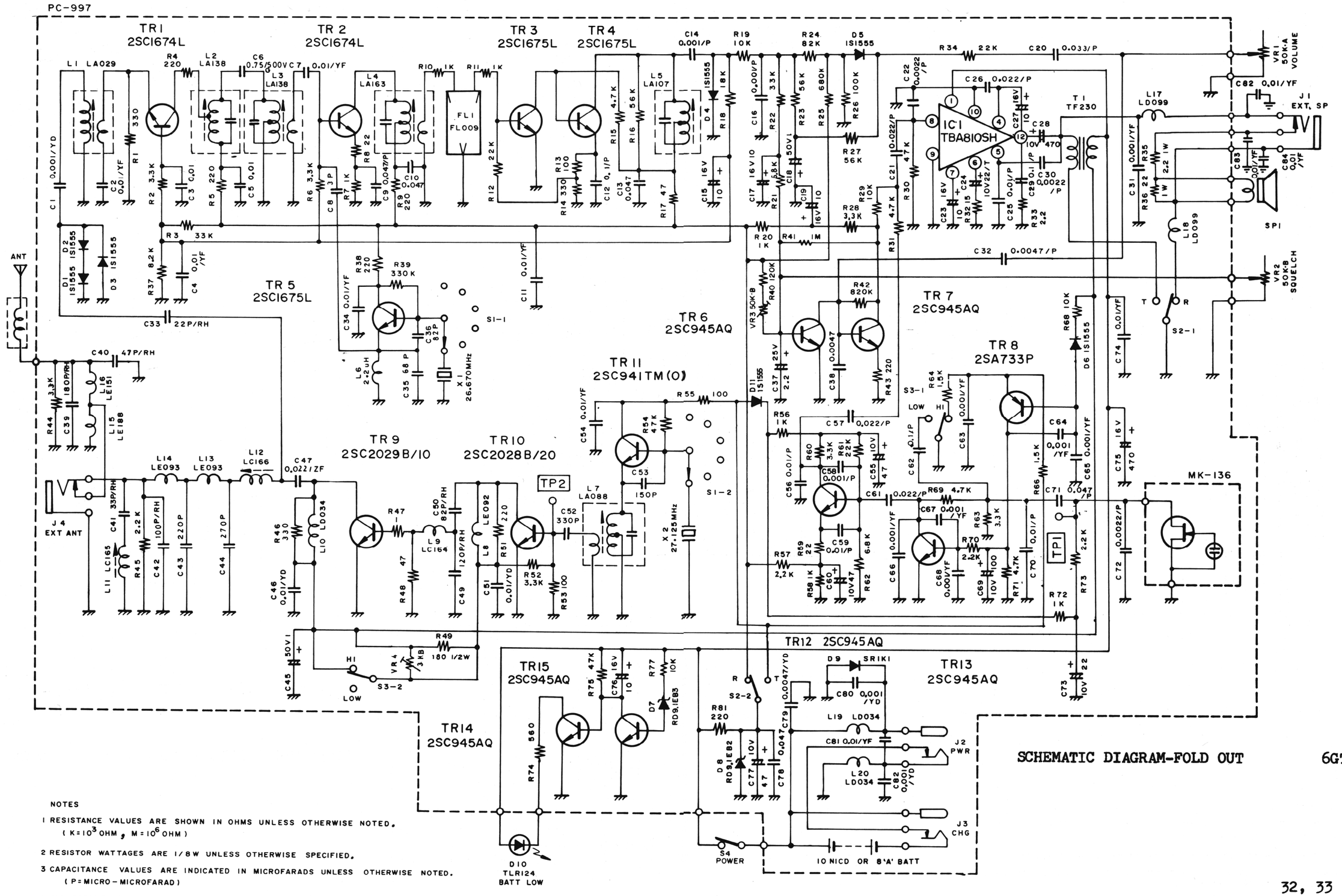

SCHEMATIC DIAGRAM-FOLD OUT

6GTL

NOTES

1 RESISTANCE VALUES ARE SHOWN IN OHMS UNLESS OTHERWISE NOTED. (K = 10^3 OHM , M = 10^6 OHM)

2 RESISTOR WATTAGES ARE 1/8 W UNLESS OTHERWISE SPECIFIED.

3 CAPACITANCE VALUES ARE INDICATED IN MICROFARADS UNLESS OTHERWISE NOTED. (P = MICRO - MICROFARAD)

4 ALL CAPACITORS TEMPERATURE CHARACTERISTICS ARE SL (LESS THAN 1000 PF) OR ZF (MORE THAN 1000PF) UNLESS OTHERWISE NOTED.