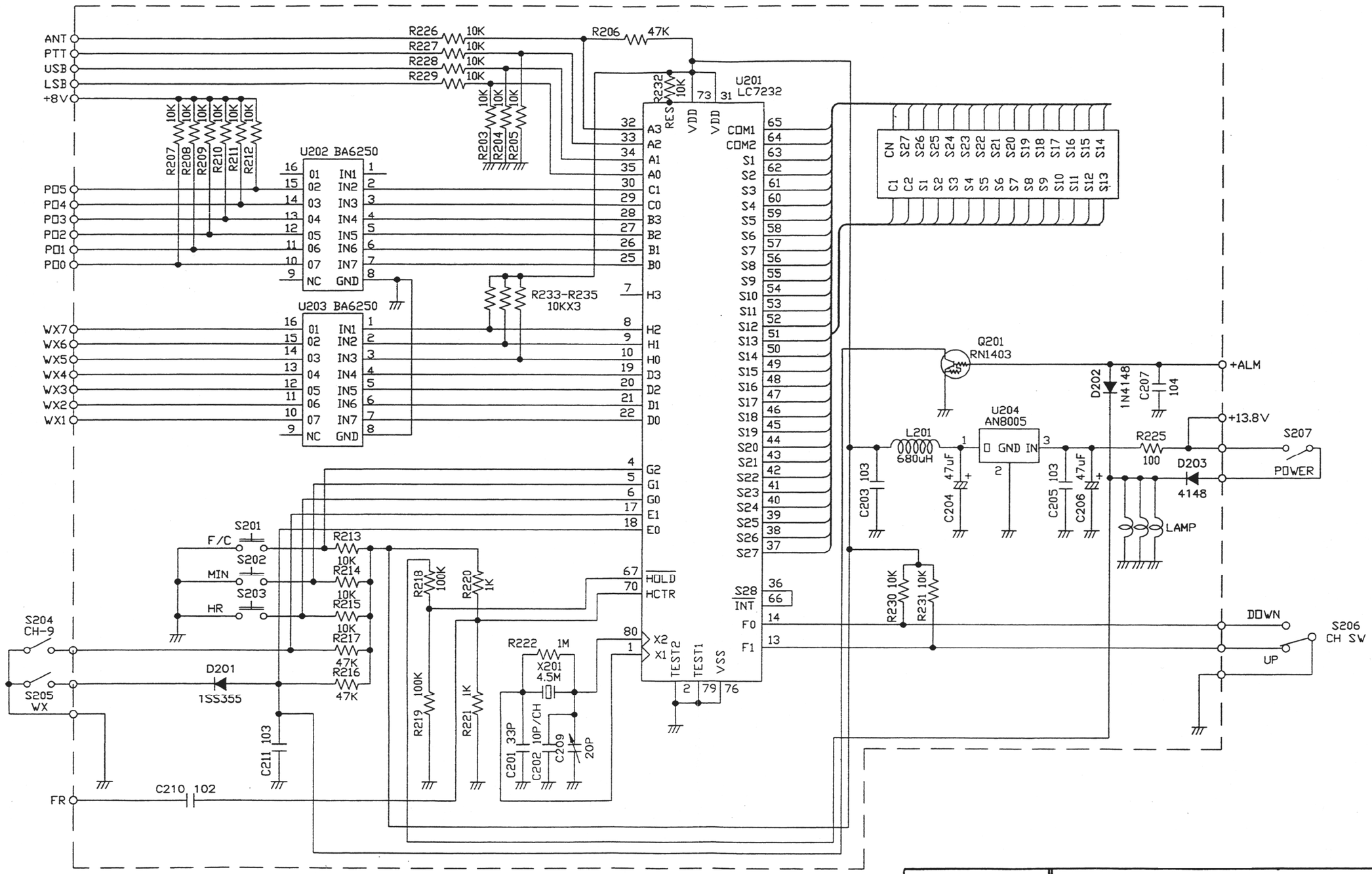

Cobra ELECTRONICS CORPORATION
6500 W. CORTLAND ST.
CHICAGO, ILLINOIS 60635

TITLE: SCHEMATIC DIAGRAM, CPU PCB			
DATE: 7/1/95	MDL: 2010GTL WX	APPR:	
EFF. S/N	PART NO./DRAWING NO.		
FROM :	PAGE OF		ISS
TO:			