TRISTAR 240

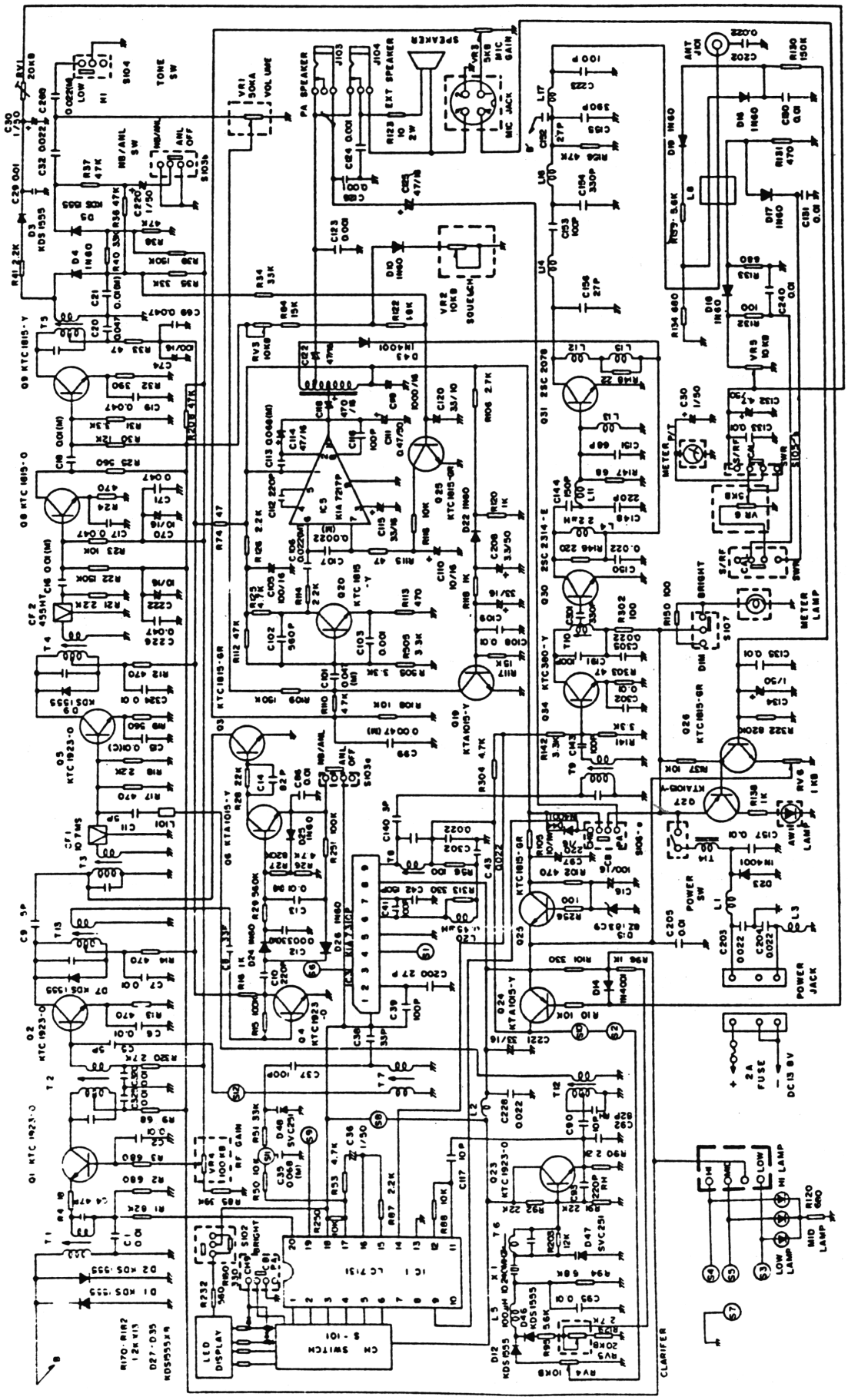
SPEAKER
PA SPEAKER
EXT SPEAKER
MIC JACK
MIC GAIN
VOL UNIT
TONE SW
NB/ANL SW
SQUELCH
ANT
METER
METER LAMP
BRIGHT
POWER SW
POWER JACK
2A FUSE
DC13.8V
HI LAMP
MID LAMP
LOW LAMP
CLARIFER
LED DISPLAY
CH SWITCH
IC1 LC7131
RF GAIN