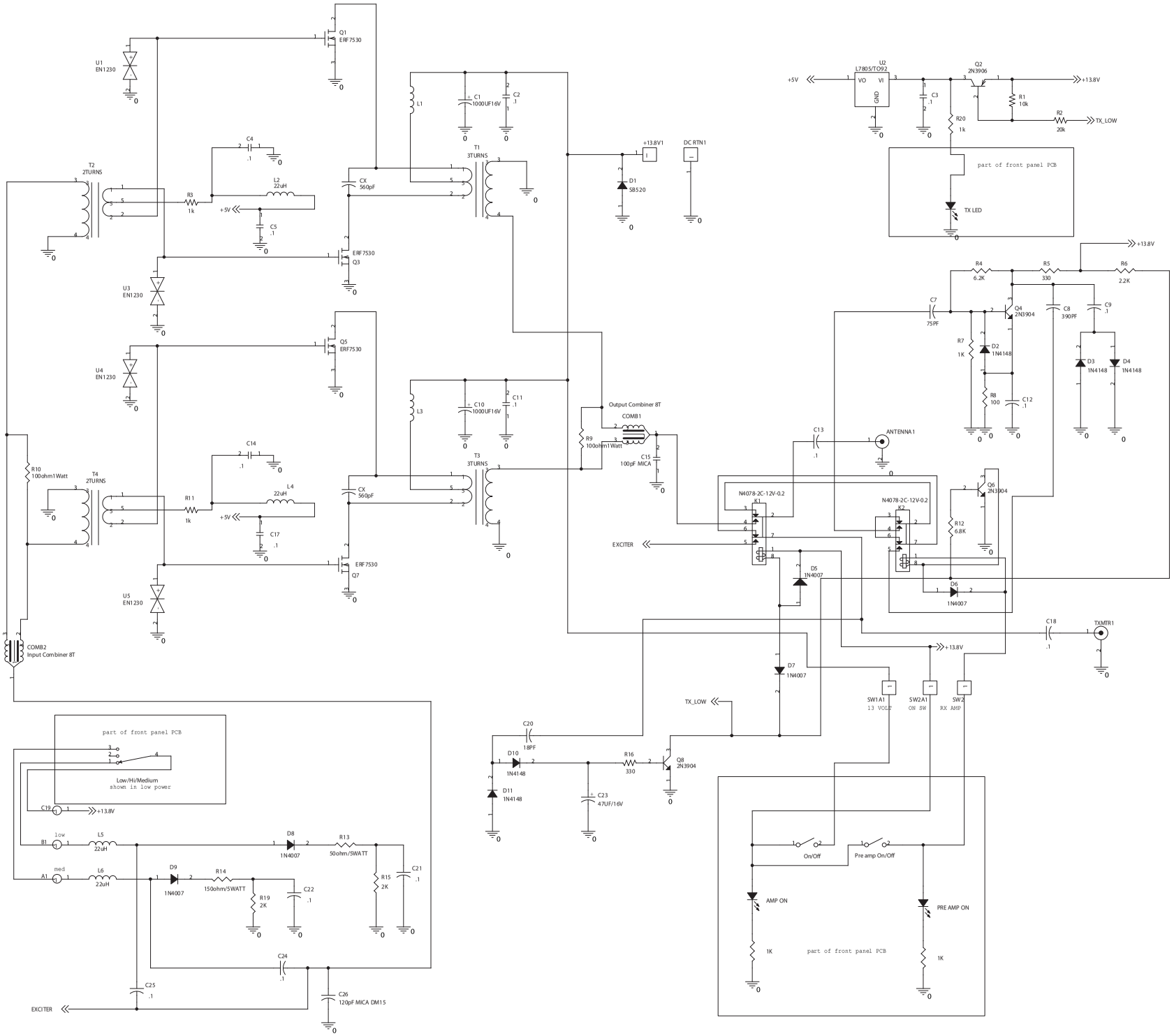
Q1
ERF7530
U1
EN1230
T2
2TURNS
R3
1k
C4
.1
L2
22uH
+5V
C5
.1
ERF7530
Q3
U3
EN1230
Q5
ERF7530
U4
EN1230
R10
100ohm1Watt
T4
2TURNS
R11
1k
C14
.1
L4
22uH
+5V
C17
.1
ERF7530
Q7
U5
EN1230
COMB2
Input Combiner 8T
L1
C1
1000UF16V
C2
.1
CX
560pF
T1
3TURNS
L3
C10
1000UF16V
C11
.1
CX
560pF
T3
3TURNS
+13.8V1
D1
SB520
DC RTN1
Output Combiner 8T
COMB1
R9
100ohm1Watt
C15
100pF MICA
EXCITER
U2
L7805/TO92
VO
VI
GND
+5V
C3
.1
R20
1k
Q2
2N3906
+13.8V
R1
10k
R2
20k
TX_LOW
part of front panel PCB
TX LED
+13.8V
R4
6.2K
R5
330
R6
2.2K
C7
75PF
Q4
2N3904
C8
390PF
C9
.1
R7
1K
D2
1N4148
D3
1N4148
D4
1N4148
R8
100
C12
.1
C13
.1
ANTENNA1
N4078-2C-12V-0.2
K1
N4078-2C-12V-0.2
K2
Q6
2N3904
R12
6.8K
D5
1N4007
D6
1N4007
C18
.1
TXMTR1
+13.8V
D7
1N4007
SW1A1
13 VOLT
SW2A1
ON SW
SW2
RX AMP
TX_LOW
C20
18PF
D10
1N4148
D11
1N4148
R16
330
Q8
2N3904
C23
47UF/16V
On/Off
Pre amp On/Off
AMP ON
PRE AMP ON
1K
part of front panel PCB
1K
part of front panel PCB
Low/Hi/Medium
shown in low power
C19
+13.8V
B1
low
L5
22uH
D8
1N4007
R13
50ohm/5WATT
A1
med
L6
22uH
D9
1N4007
R14
150ohm/5WATT
R19
2K
C22
.1
R15
2K
C21
.1
C24
.1
C25
.1
C26
120pF MICA DM15
EXCITER